JC-LSE8040

Model No.	JC-LSE8040
Focal Length	80mm
Sensor Size	Φ80mm
F No.	F4.0-F16
Working Distance	250mm~∞
Mount	F/M42/M48/M58/M72/M90
Weight	180g@F-Mount
Temperature Range	-20℃～+60℃
Filter Size	M43.0x0.75

Features:

1. Large image plane: image circle Φ82mm
2. Athermalization: -20℃~+60℃ without defocusing
3. Large travel focusing range: 250mm~infinity working distance
4. Better clarity consistency between the center and edge of the aperture image
5. Anti-vibration focusing fastening method. Anti-vibration lens can be customized quickly

Mag.	FOV mm	WD mm	O/I mm	Distortion %	Extension Ring
0.334X	246	300	428	-0.07%	Add
0.276X	297	350	473	-0.05%	Add
0.236X	348	400	520	-0.04%	Add
0.206X	399	450	567	-0.03%	Add
0.182X	449	500	615	-0.02%	Add
0.164X	500	550	664	-0.01%	Add
0.142X	577	625	737	0.01%	Add
0.121X	679	725	835	0.02%	Add
0.102X	806	850	959	0.04%	Add
0.086X	959	1000	1108	0.05%	Add
0.071X	1162	1200	1306	0.06%	Add
0.060X	1366	1400	1506	0.07%	Add
0.041X	1977	2000	2104	0.09%	Add

PRODUCT SIZE:(mm)

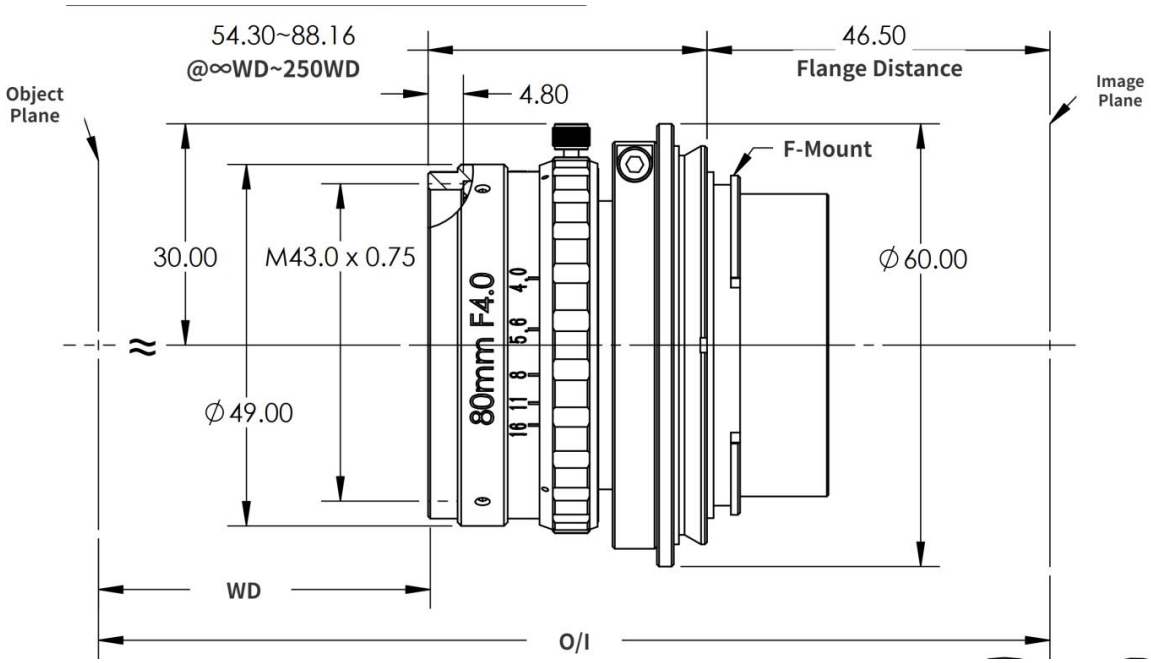

Fine-Lens | Address: Room 307,Floor 2，Xinrui Kechuang Center, No.1566, Baodai West Road, High-tech Zone, Suzhou
WhatsApp: +8613315278275 | E-mail: finelensess@gmail.com | Website: www.fine-lens.com