JC-LSE9256

Model No.	JC-LSE9256
Focal Length	92mm
Sensor Size	Φ67mm
F No.	F5.6-F16
Working Distance	340mm~700mm
Mount	V48/M72
Weight	196.5g
Temperature Range	-20℃～+60℃
Filter Size	M43x0.75

Features:

1. Large image plane, high resolution: image circle Φ67mm, suitable for 151MP 3.76μm sensor
2. Low dispersion design: three colors of light can be clearly imaged at the same focal plane
3. Athermalization: -20℃~+60℃ without defocusing
4. Multiple interface types to choose from: suitable for V48-Mount interface, can quickly customize VF to M72 and other anti-vibration fastening interfaces
5. Can be quickly customized into anti-vibration lenses

WD mm	O/I mm	Object FOV mm	Mag.	151MP(14208*10640*3.76μ)	
				H mm	V mm
				53.422	40.006
671.61	792.69	445.64	0.15	356.147	266.707
599.61	722.51	393.26	0.17	314.247	235.329
574.61	698.27	375.06	0.18	296.789	222.256
521.61	647.14	336.50	0.20	267.110	200.030
444.61	573.78	280.40	0.24	222.592	166.692
414.61	545.62	258.54	0.26	205.469	153.869
400.61	532.60	248.34	0.27	197.859	148.170
339.61	476.29	204.34	0.33	161.885	121.230

PRODUCT SIZE:(mm)

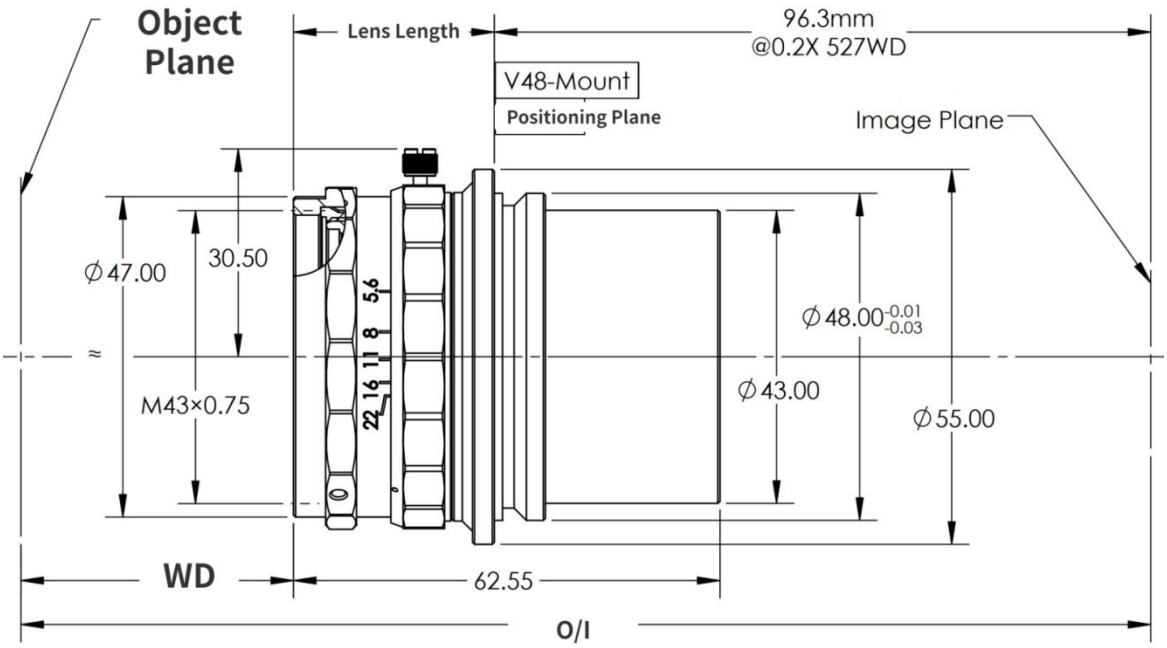

Fine-Lens | Address: Room 307,Floor 2，Xinrui Kechuang Center, No.1566, Baodai West Road, High-tech Zone, Suzhou
WhatsApp: +8613315278275 | E-mail: finelensess@gmail.com | Website: www.fine-lens.com