JC-CT0513X

Model No.		JC-CT0513X
Resolution		5MP
Sensor Size		2/3"(φ11mm)
Magnification		0.5X-1.3X
Working Distance		178.8-102mm
Mount		C-Mount
Object NA		0.048-0.065
F No.		F5.2-F10
O/I		275-248mm
Operation	Focus	Manual
	Aperture	Manual
Distortion		<0.01%
Temperature Range		-20℃ ~ +60℃

Features:

1. Adjustable mag. from 0.5X to 1.3X
2. Compatible with cameras up to 2/3" sensor size
3. Telecentric optical design
4. Low distortion, <0.01%
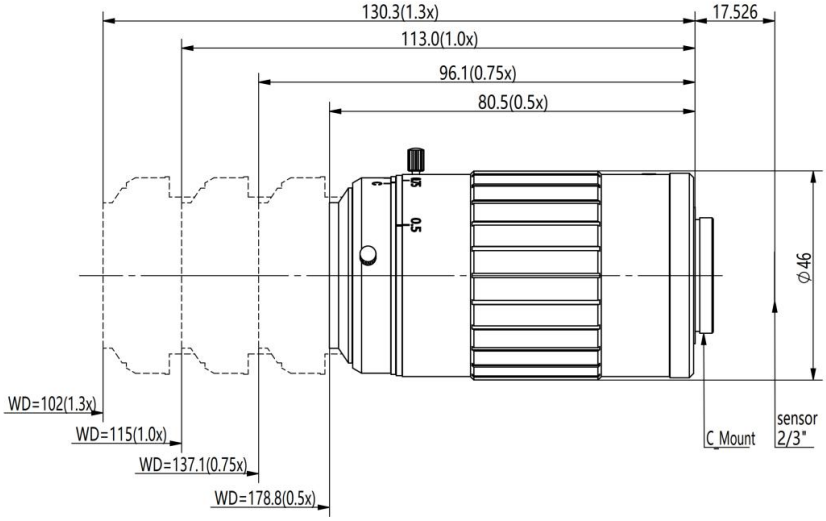
PRODUCT SIZE:(mm)